Environmentally friendly photosensitive sensor

Product specifications

O Customer	
Date	
Model	LS03-G ML
Product number	

Make	
Approval	
O Customer Signatures	

Sales center
Address: 32nd Floor,Tower T3,One Excellence,No.5109Menghai Avenue,Nanshan District, Shenzhen, China
Website www.nysenba.com
Tel 86-755-82594756 189293

■ Product function

1. (CdS) ROHS
Replace Photoresistors(Cds),Rok

■ Product Dimensions

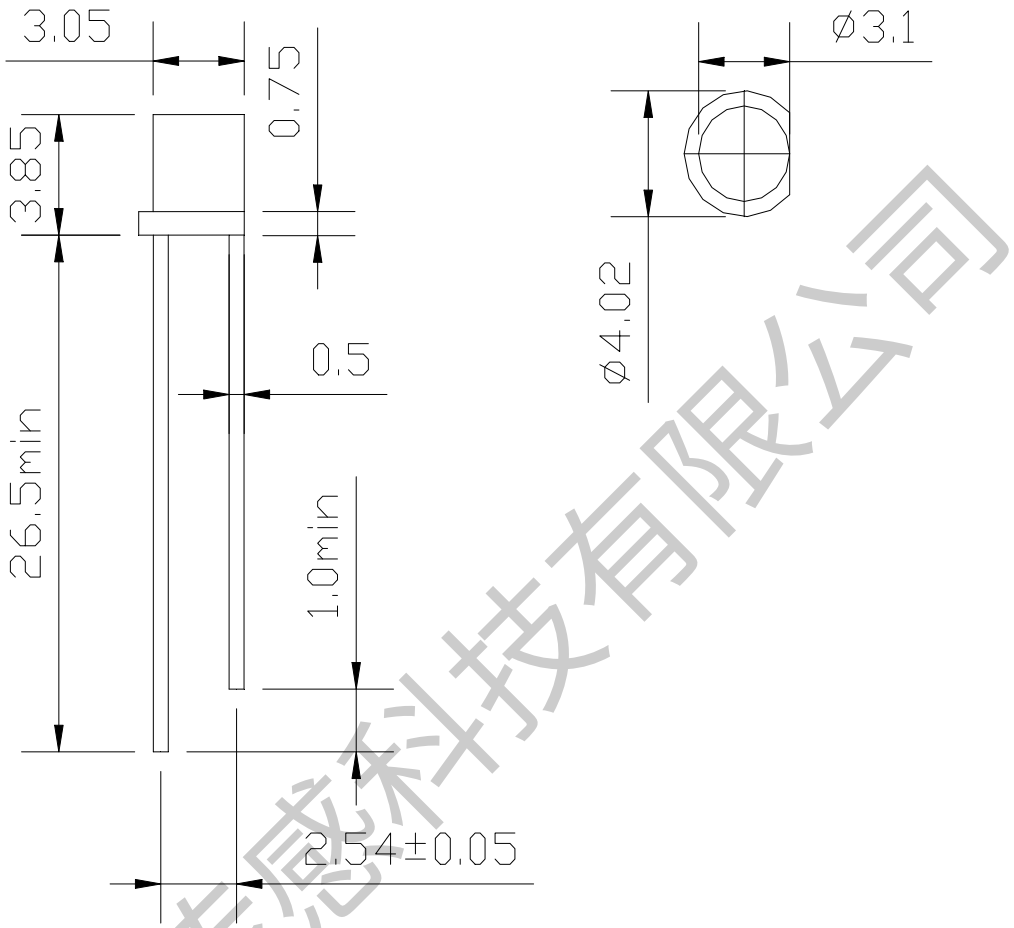

Note

1. **Long pin-Emitter Short pin-Collector**
2. mm , Ñ0.15mm
   Unit: mmÑ 0.15mm
3.
   The appearance color of colloid shall be subject to the sample
4. **1.0mm**
   Protruded resin under the base is 1.0mm maxium.

森霸传感科技有限公司

■ **Ta=25 MAXIMUM RATING (TA = 25 Á C)**

ΠΥ O, Parameter name Ţ λ m Jď g Symbol P ´ Re' ĵ λ g m=ĸ]! ɕ ¯ Ɔ lö

■ Reference circuit

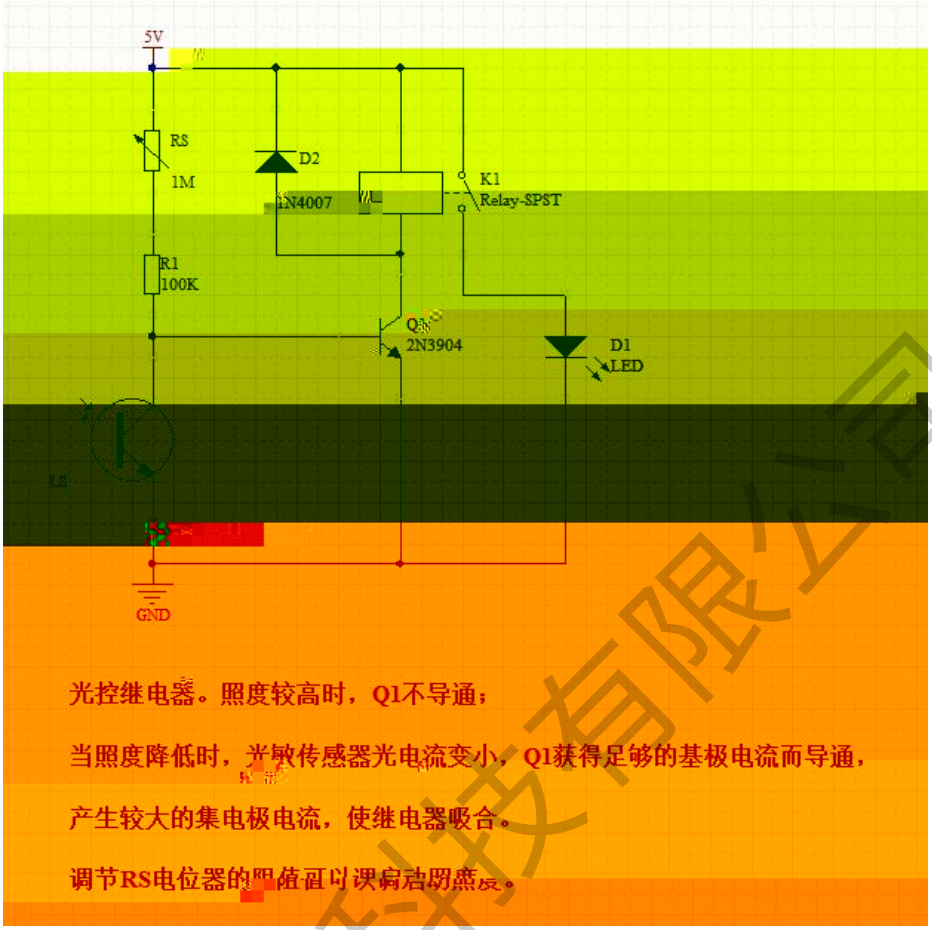

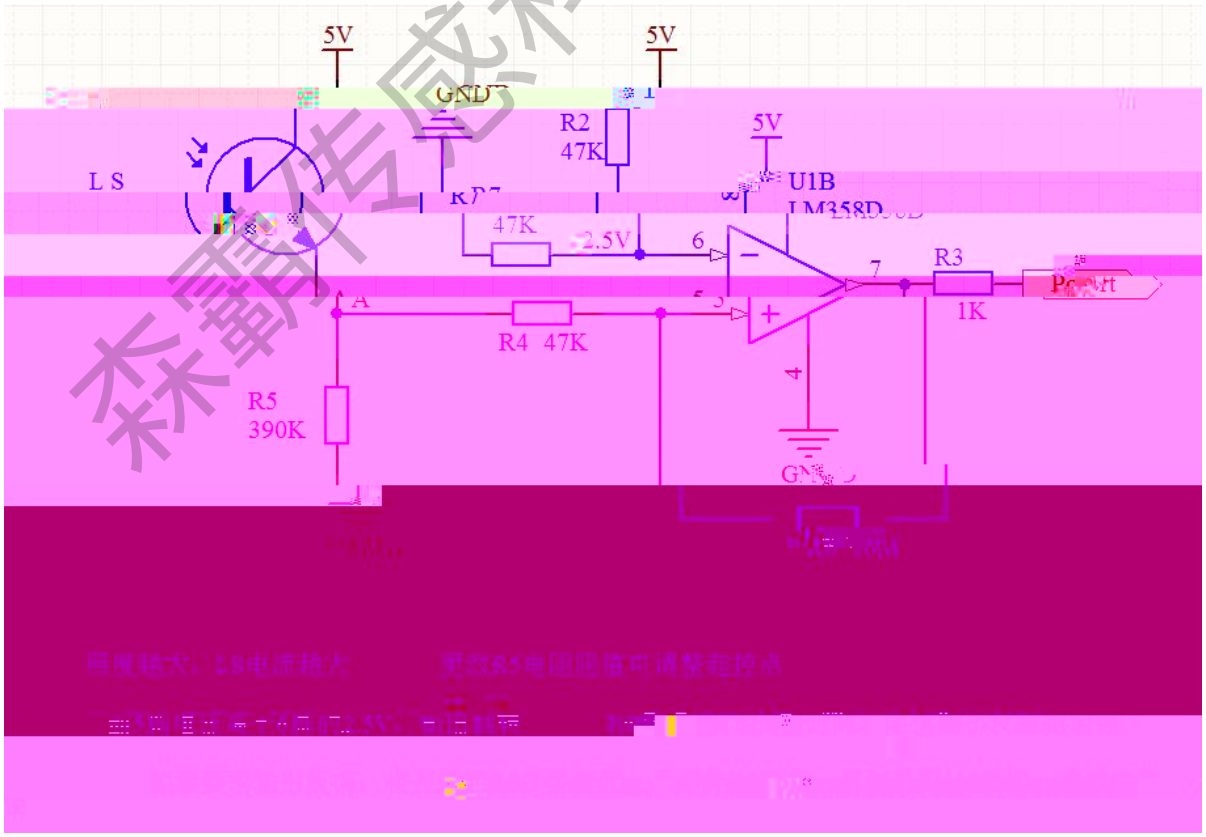

森霸传感科技有限公司

■ Typical photoelectric characteristics curves

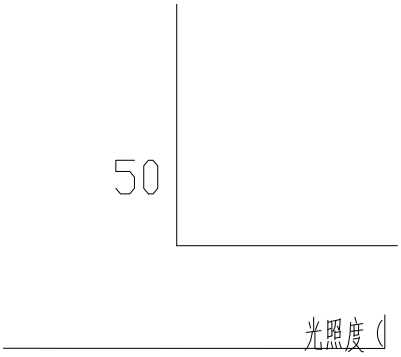

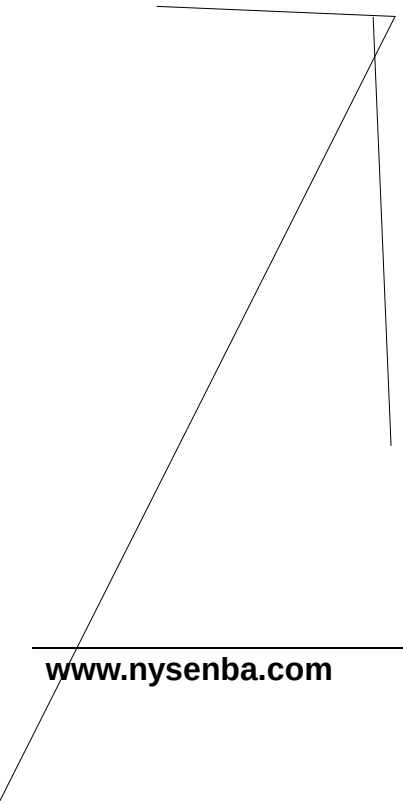

■ Reliability Test

Test Parameter	Reference Criterion

Precaution

1. ج U 70% 3
3 ضي ك
The storage conditions of [redacted] ving the factory shall be 0 to + 30 Á C, the relative humidity shall not [redacted] and the storage period shall be 3 months. If the storage period is more tha [redacted] duct shall be placed in a closed container with nitrogen or desiccant, and [redacted] may be up to one year

2. U 0 +30ÁC
Ò60% ضي ﻟﺎ
Once the package is open [redacted] ould be used up as soon as possible . If it is not used up,It should be sealed imm [redacted] ge condition is 0 +30ÁC, and the relative humidity ≤ 60%. It should be used up [redacted]

3. ج ﺟ ﺟ
ج
The product support is silv [redacted] of ferroalloy. The silver surface will be affected by corrosive gas and other [redacted] uld be avoided to make the product in acorrosive or tarnished environment, [redacted] welding perfomance.

4. ج ﺗ
It is recommended to use [redacted] agent when cleaning products. If other cleaning agents are used, [redacted] nfirm whether the cleaning agent will corrode the epoxy gel. In any case [redacted] be completed within 1 minute.

5. ﺟ λ

森霸传感科技有限公司