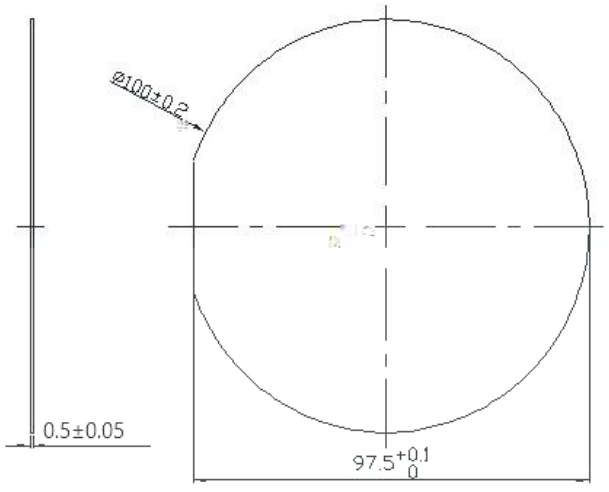
Ø100±0.2
0.5±0.05
97.5 +0.1 0